Memory Plus Expansion Board (250-1062) Board Layout Faxback Doc. # 2015

Refer to Faxback Doc. # 2012 for setting this board.

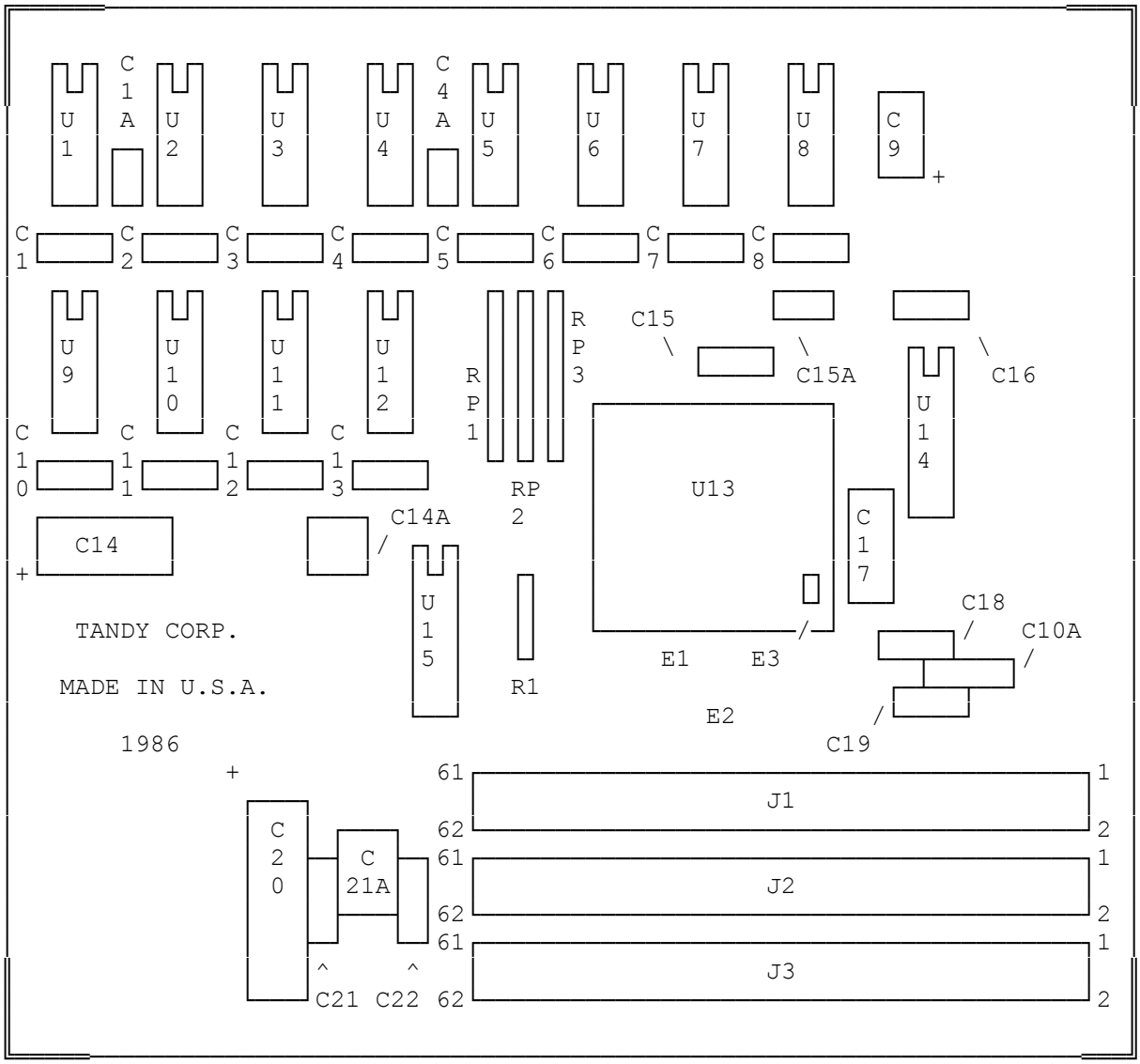

(css 08/05/93)