4016 SX (250-4901) Layout Faxback Doc. # 1578
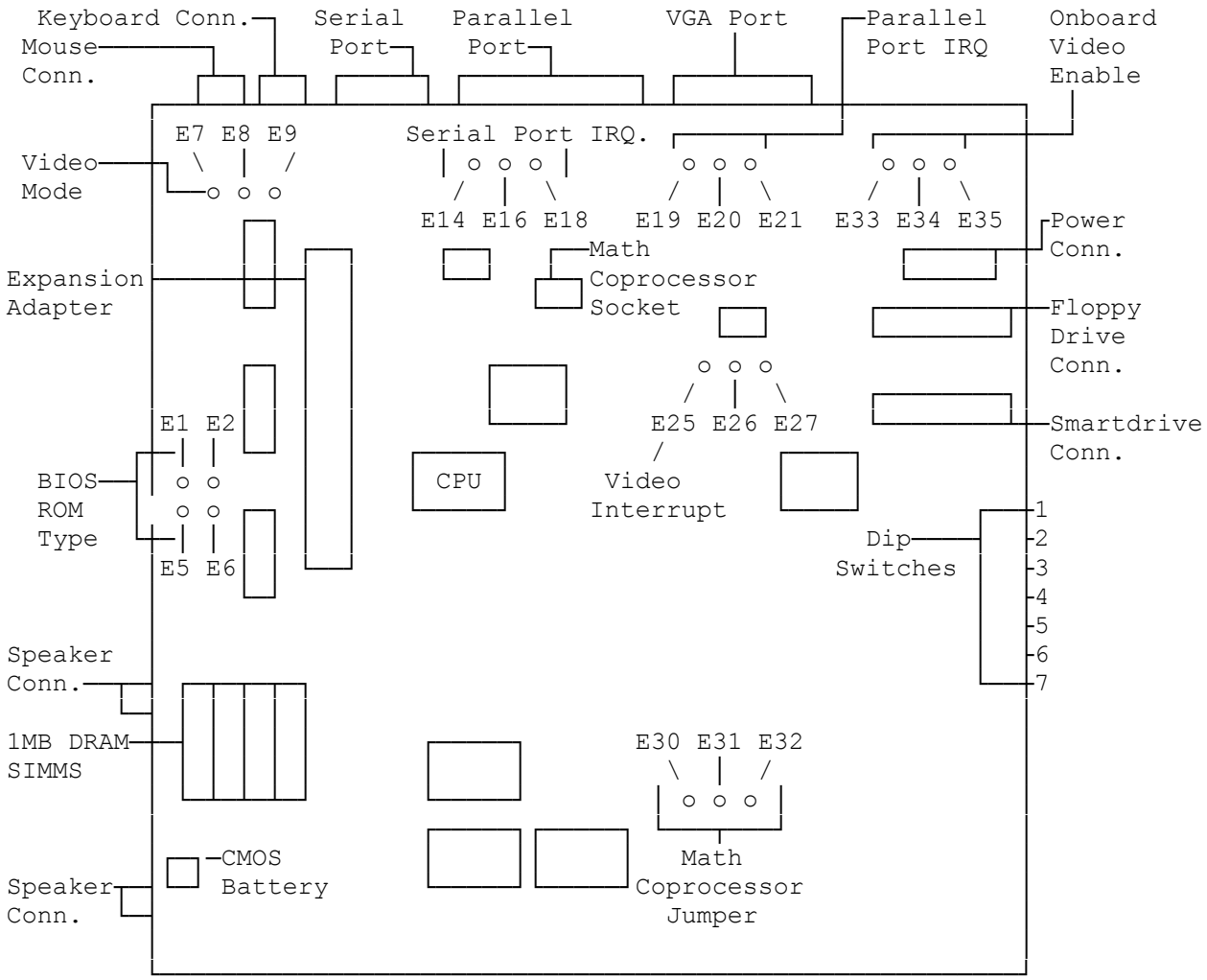
Note: Refer to Faxback Doc. # 1563 for Setting this board.